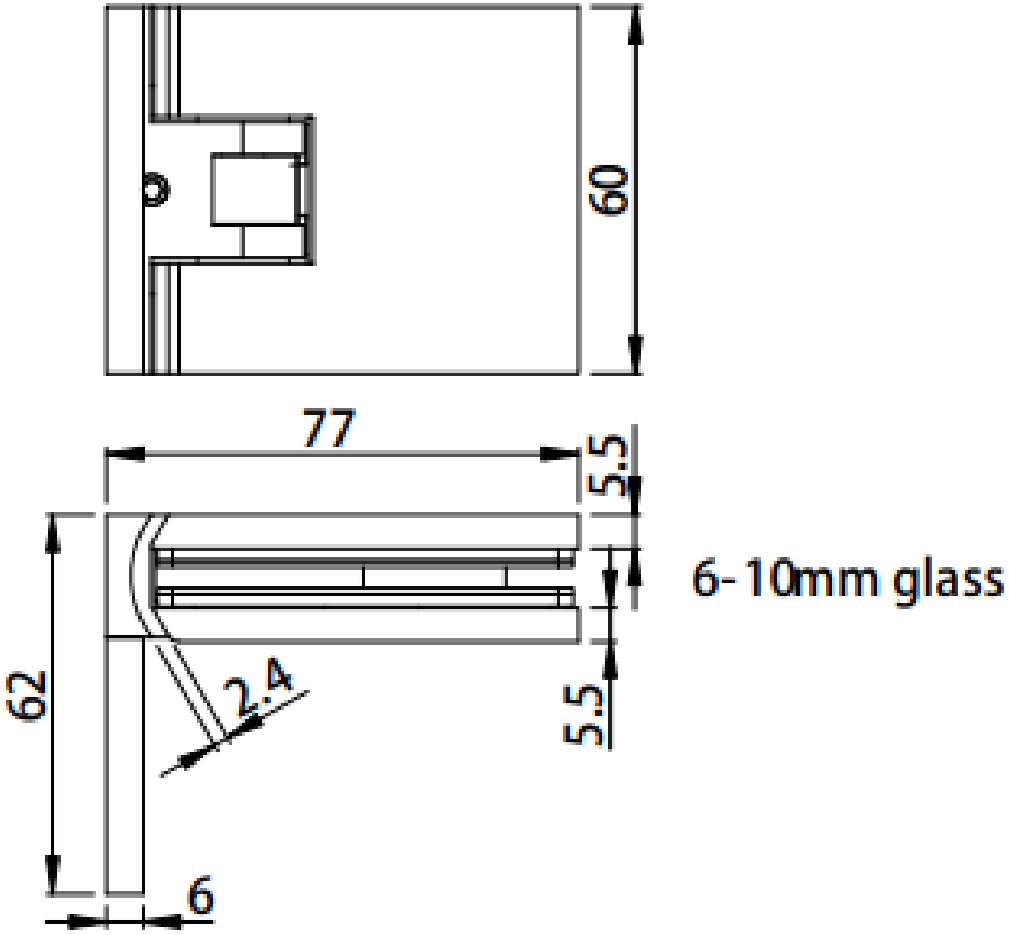
60
77
5.5
6-10mm glass
62
2.4
5.5
6